Daytona

AUTOMOTIVE EQUIPMENT

CANADIAN OWNED AND OPERATED
SINCE 1999

USER MANUAL

PLEASE READ THIS ENTIRE MANUAL BEFORE INSTALLATION/OPERATION OF THIS LIFT

Model # HFP412 Serial # _____

Daytona Automotive Equipment
866-219-9991 Fax: 613-475-6547
E-mail: sales@daytonaproducts.com
Web site: www.daytonaproducts.com

TABLE OF CONTENTS

Important Note----------Page 3

Definition----------Page 4

Preparation and General Information----------Page 5

Important Concrete and Anchoring Information----------Page 6

Installation and Basic Operation Instruction----------Page 7

Safety Procedures----------Page 11

Maintenance Schedule----------Page 12

Troubleshooting----------Page 14

Owners Responsibilities----------Page 15

Packing list ----------Page 16

Installation specification (Fig 2)----------Page 17

Prepare area (Fig 3)----------Page 18

Cable wiring (Fig 20)----------Page 19

Parts code (Fig 21)----------Page 20

IMPORTANT NOTES

- Do not install this lift on any surface other than concrete confirming to minimum specifications.
- Do not install this lift over expansion joints or cracks. Check with building architect.
- Do not install this lift on a second floor with a basement beneath without written authorization from building architect.
- Do not install this lift outdoors unless special consideration has been made to protect the power unit from inclemency weather conditions.
- A good level floor is recommended for proper installation and operation. Concrete should be a minimum of 4" thickness and 3,000 psi tensile strength with steel or fiber mesh reinforcement.
- The lift is intended to raise the entire body of the vehicle. Do not attempt to lift only part of the vehicle. Improper use of this equipment could result in damage to the lift, yourself or other property.
- The lift is intended to lift vehicles only. It is not designed to lift any person or equipment containing people.

- All persons using this equipment should be qualified, responsible persons and should follow the operation and safety guidelines set forth in this manual.

- Improper installation can cause damage or injury. Manufacturer will not assume liability for loss or damage of any kind, expressed or implied, resulting from improper installation or use of this product. Read the installation and operation manual in its entirety before attempting to install the lift.

DEFINITION

The lift is a Four-Column Flat Deck Hydraulic, cable driven unit.
The name / model numbers is designated below:
Surface Mounted 4-Post Flat Deck Lift with 12,000LBS Lifting Capacity.
Model number: FP12K-K

This lift is a 6 ton capacity, 4-post lift. The safety latch system is very similar to an extension ladder. The safety latch is in contact with the rack as the lift ascends and drops into place as the lift rises. Safety latch engages in 3" increments and begins about 20" from the ground. The latch must be manually disengaged for the lift to descend. The latch is released by pulling the release handle raising the latch up off the latch rack. Once the raise button is pressed, the latch will automatically re-engage after approximately 3" of travel. The work is done with the heavy-duty cable connected to a 3" cylinder, driven by a hydraulic pump capable of providing 3,000psi pressure.

Please read the Safety Procedures and Operation Instructions in this manual before operating the lift. Proper installation is very important. To minimize the chance of making an error in installation, please read this manual through carefully before beginning installation. Check with building owner and / or architect's building plans when applicable. The lift should be located on a relatively level floor with 4" thickness and 3000psi tensile strength concrete sufficiently cured.

This is a vehicle lift installation / operation manual and no attempt is made or implied herein to instruct the user in lifting methods particular to an individual application. Rather, the contents of this manual are intended as a basis for operation and maintenance of the unit as it stands alone or as it is intended and anticipated to be used in conjunction with other equipment.

Proper application of the equipment described herein is limited to the parameters detailed in the specifications and the usages set forth in the descriptive passages. Any other proposed application of this equipment should be documented and submitted in writing to the factory for examination. The user assumes full responsibility for any equipment damage, personal injury, or alteration of the equipment described in this manual or any subsequent damages.

PREPARATION

The installation of this lift is relatively simple and can be accomplished by 2 men in a few hours. The following tools and equipment are needed:

AW 32,46 Non-Detergent Non-Foaming Anti-Wear Hydraulic Oil SAE-10 (12 quarts)
Chalk line and 12' Tape Measure, Transit and a 4' Level
Rotary Hammer Drill with 3/4" Masonry Drill Bit. Core Drill Rebar Cutter, Hammer and Hex-Key / Allen Wrench Set
Sockets and Open Wrench set, 1/2" thru 1-1/2"(1-1/8" for 5/8" Anchors)
Medium Crescent Wrench and Medium Pipe Wrench
Crow Bar for Shim Installation, Medium Flat Screwdriver and Cross Screwdriver.
Vise Grips and Needle Nose Pliers

GENERAL INFORMATION

1. Carefully remove the crating and packing materials. CAUTION! Be careful when cutting steel banding material as items may become loose and fall causing personal harm or injury.
2. Identify the components and check for damage or shortages. If damage or shortages are discovered, contact distributor immediately. *Save the shipping bolts for use in the installation.*

Packing:

*The lift is packed into one heavy rack and one carton box on it.
*Every rack has two runways, four columns with covers, two cross bars, two ramps, two front stops, one long lock linkage rod, and a accessory box.

3. Lift location - check with building owner and / or architect's building plans when applicable. The lift should be located on a relatively level floor with concrete sufficiently cured.

Suggestion:

(1) The floor be flat and without gradients (maximum of 10mm tolerance between the two base plate of the columns)
(2) There are no cracks within 38" and no seams within 6" of the base plate.
(3) The concrete is recommended with following dimension: 157.5"L * 39.5"W * 7.75"H.

Remember any structure is only as strong as the foundation on which it is located.

4. Check for ceiling clearance.

Suggestion:

At least 5" left between the top of a car on the lift and the ceiling.

Check for clearance in the front and rear of vehicle when on lift - will the garage door open and close properly.

Suggestion:

At least 24" space left between the edge of the column and the wall.

At least 144" space left between the central line of the columns and the wall.

(At least 36" space for walking left between the front or the rear of the vehicle and the wall.)

5. Check the power supply. The voltage phase and proper amperage requirements for the motor is shown on the motor plate. Only a certified electrician should perform the wire connection.
   Suggestion:
   For a 220V / 50Hz, single phase, 2.2Kw motor, the rated current will be 15A.

Basic Specification

Description	Capacity	Lifting Time	Overall Height	Overall Width	Lifting height
Flat Deck	6 ton	(about)	88.6"	122.8"	69.3"
	12000lbs	50 Sec	2250 mm	3120 mm	1760mm

IMPORTANT CONCRETE AND ANCHORING INFORMATION

1. Concrete shall have compression strength of at least 3,000 PSI and a minimum thickness of 4" in order to achieve a minimum anchor embedment of $3^1/_4$". When using the standard supplied 3/4" x 5 1/2" long anchors, if the top of the anchor exceeds $2\ ^1/_4$" above the floor grade, you DO NOT have enough embedment.
2. Before drilling anchor holes in concrete floor use the holes in column base plate as a guide. Make sure the distance from the hole to the edge of concrete is not less than 6"Hole to hole spacing should not be less than $6^1/_2$" in any direction. The hole depth should be a minimum of $4^1/_4$"
3. **CAUTION:** DO NOT install the lift on any asphalt or other similar unstable surface. Only anchoring in concrete floor supports the columns.
4. Shim each column base until each column is plumb. If one column has to be elevated to match the plane of the other column, full size base shim plates should be used. Shim thickness MUST NOT exceed $^1/_2$"when using the $5^1/_2$" long anchor provided with the lift. Adjust the column extensions plumb also.
5. If anchors do not tighten to 80 ft-lbs. Installation torque, replace concrete under each column base with a 4'*4'*6" thick 3,000 PSI minimum concrete pad keyed under and flush with the top of existing floor. Let concrete cure before installing lifts and anchors.

ANCHORING TIP SHEET

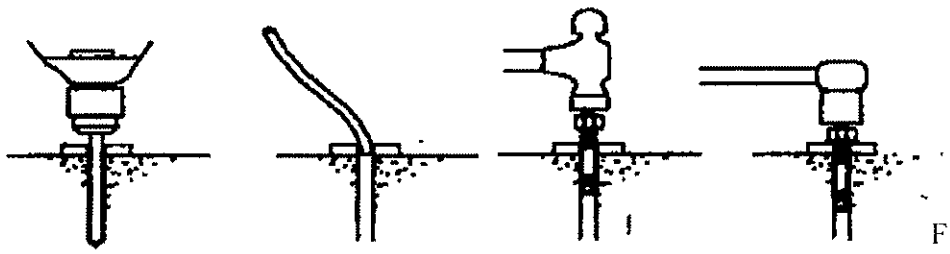

FIG. 1

Anchors must be at least 6" from the edge of the slab or any seam.

1. Use a concrete hammer drill with a carbide tip, solid drill bit the same diameter as the 3/4"anchor, Do not use excessively worn bits or bits which have been incorrectly sharpened.
2. Keep the drill perpendicular while drilling.

3. Let the drill do the work. Do not apply excessive force. Pull the drill up and down occasionally to remove residue while drilling.
4. Drill the hole all the way through the concrete.
5. For better holding power blow dust from the hole.
6. Place a flat washer and hex nut over thread of an anchor, leaving approximately $^1/_2$ inch of thread exposed. Do not damage threads. Tap anchor into the concrete carefully until nut and flat washer are against base plate. Do not use an impact wrench to tighten. Tighten the nut two or three turns on average concrete (28-day cure). If the concrete is very hard, only one or two turns may be applied.
7. Drilling thru concrete (recommended) will allow the anchor to be driven thru the bottom if the threads are damaged.

INSTALLATION INSTRUCTION

IMPORTANT NOTICE

These instructions must be followed to insure proper installation and operation of your lift. Failure to comply with these instructions can result in serious bodily harm and void product warranty. Manufacturer will assume no liability for loss or damage of any kind, expressed or implied resulting from improper installation or use of this product.

PLEASE READ ENTIRE INSTRUCTION BEFORE STARTING TO ASSEMBLE THE LIFT

STEP 1: (Selecting Site) Before installing your new lift, check the following:

1. LIFT LOCATION: Always use architects plans when available. Check layout dimension against floor plan requirements making sure that adequate space is available.
2. OVERHEAD OBSTRUCTIONS: The area where the lift located should be free of overhead obstructions such as heaters, building supports, electrical lines etc.
3. DEFECTIVE CONCRETE: Visually inspect the site where the lifts is to be installed and check for cracked or defective concrete.
4. FLOOR REQUIREMNETS: The lift should be installed on a 3000 PSI concrete with little gradients.

STEP 2: (Unloading and Unpacking)

1. After unloading the lift, place it near the intended installation location.
2. Remove the shipping bands and packing materials from the unit.
3. Remove the packing brackets and bolts holding the two runways together. (**Do not discard bolts, they may be used in the assembly of the lift**)

STEP 3: (Site Layout)

1. Determine which side will be the approach side.
2. The power-side runway is always on the left side of the approach side. The POWERSIDE column has the power-unit mounting position on the side. Note the power unit column can only be located on the far end of the left side.
3. Once a location is determined, use a carpenters chalk line to layout a grid for the post locations. Keep all dimensions and square within $^1/_8$ " or malfunction of the lift will occur. (See Fig. 2)
4. After the post locations are properly marked, use a chalk or crayon to make an outline of the posts on the floor at each location using the post base plates as a template.

5. Double check all dimensions and make sure that the layout is perfectly square.
6. Before continuing with the installation it is helpful to stand the posts up at their respective locations and get a visual of the shop, aisles and other clearances. Also, this is a good time to drive a vehicle into position and check for adequate clearance.
7.

NOTE

All models MUST be installed on 3000PSI concrete only confirming to the minimum requirements. New concrete must be adequately cured by at least 28 days minimum.

STEP 4: (Installing the Columns with cross bars)

1. Before proceeding, double check measurements and make certain that the bases of each column are square and aligned with the chalk line.
2. Locate the columns at their respective locations according to the chalk line layout. (See Fig.3) Pay attention to the power-side column. DO NOT BOLT columns at this moment. Use caution to prevent columns from falling over.
3. Unbolt the safety rack at the bottom inside the column.(See Fig. 4)

Fig.4

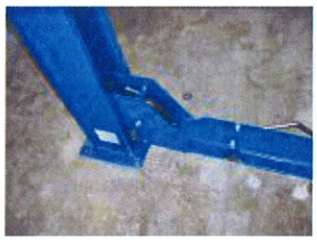

Fig.5

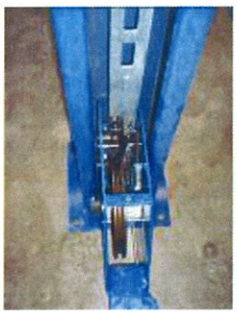

Fig.6

4. Insert the end of cross bar into every column. (See Fig. 5) To be sure that the end with lock release handle of front cross bar is inside the power-side column. Handle faces out (front). The rear cross bar should be placed as a mirror image of the power-side one. (The side with a tiny bar link two ends face back)
5. Insert the safety rack into the cross bar end as shown in Fig. 6.
6. Hold down the safety rack then raise up the cross bar ends to rest on the first (lowest) position. (See Fig. 7)
7. Tighten up the bolt of every safety rack at the bottom. (See Fig. 8)

Fig.7

Fig. 8

Fig. 9

8. Again check all the position of the columns according to the drawings. Using a tape measure to measure the distance between the opposite corners of the base plate on the columns. Equal values will insure the lifting arms will be in square.
9. Using the base plate on the column as a guide, drill each anchor hole in the concrete all the way through, using a rotary hammer drill and 3/4" concrete drill-bit. To assure full holding power, do not ream the hole or allow the drill to wobble. (See Fig. 9)
10. After drilling, remove dust thoroughly from each hole using compressed air and/or wire brush. Make certain that the column remains aligned with the chalk line during this process.
11. Assemble the washers and nuts on the anchors then tap into each hole with a block of wood or rubber hammer until the washer rests against the base plate. Be sure that if shimming is required that enough threads are left exposed.
12. Using a level, check column plumb for every side.(See Fig. 10) If shimming is required, use $^3/_4$" washers or shim stock, placing shims as close as possible to the hole locations. This will prevent bending the column base plates.
13. With the shims and anchor bolts in place, tighten by securing the nut to the base then turning 2-3 full turns clockwise. DO NOT use an impact wrench for this procedure.

Fig.10

Fig.11

Fig. 12

14. Using the level again, check the cross bar front and rear. (See Fig. 11) If need, loose the bottom bolt of the safety rack. Turn the rack nut on the top of the column to raise or lower cross bar. Retighten bottom bolt.

STEP 5: (Mounting the runway)

1. Put the OFFSIDE runway on the cross bars at the right side. Be sure that the utility rails for beam lift are located inside. (See Fig. 13)

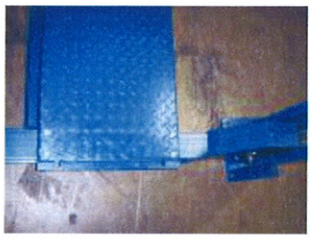

Fig. 13

Fig.14

Fig.15

2. Using bolts provided, bolt the right-rear end of the off-side runway on the rear cross bar. The other end is free.
3. Before locating the power-side runway on the cross bars, pull out the cables underneath and put them over the pulleys. The shorter one is for the power-side column. The longer one is for the offside column.
4. Take off the stop plate of the big pulley shaft on one end of cross bar. (See Fig.14) Take out the big pulley in order to let the cable go through it. (See Fig. 15) Then reinstall the big pulley and fasten the stop plate. Be sure that the cable is against the small roller so that the emergency locking latch is off the rack.
5. Tighten all the bolts on the power-side runway with supplied bolts, nuts, and spring washes.
6. Bolt the threaded end of the cable on the top of the column. (See Fig. 16) Do the same for other cables and columns.

Fig. 16

Fig.17

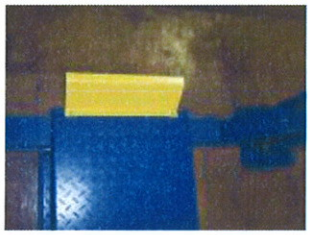

Fig. 18

SUGGESTION

Pull out the ram of the cylinder underneath the power-side runway as longer as possible, to make the cables reach the column top easily.

STEP 6: (Mounting the POWER UNIT)

1. Attach the power unit to the POWER-SIDE COLUMN using bolts, nuts and washers supplied. (See Fig. 17)
2. Fill the reservoir with hydraulic oil. Make sure the funnel used to fill the power unit is clean. Suggestion: Use AW 32,46 Non-Detergent Non-Foaming Anti-Wear Hydraulic Oil SAE-10
3. Connect the oil hose from the power-side runway to the power unit.
4. Have a certified electrician run the 220V/60Hz single phase power supply to the motor. Be sure

to size the wire for a 25 amp circuit.

STEP 7: (Routing the CABLES)

1. Check again that all the cables are on the pulleys both of the columns and underneath the power-side runway.
2. Make sure that the current of the power supply is enough for the motor.
3. Press the start button on the motor to raise the runways a little. Make sure that the safety latches are not resting on the racks.
4. Screw the nut up or down on the column top to level the cross bar and runway.

IMPORTANT NOTE

The cables should be checked weekly for equal tension. Failure to do this will cause uneven lifting. The cables should always be adjusted so that they are equal tension when the cross bars are resting on the safety locks.

STEP 8: (Mounting on accessories)

1. Mount the front stops. (See fig. 18)
2. Connect the long linkage rod from Front cross bar to rear cross bar. Make sure the safety locks are working correctly.
3. Route the hydraulic hose underneath the power-side runway.
4. Mount on the approaching ramps.
5. Put the column covers on the column.

STEP 9: (Lift start up)

1. Do not place any vehicle on the lift at this time!
2. Cycle the lift up and down several times to insure latch click together and all air is removed from the system.
3. To lower the lift, the latch releases must be manually released while the lowering handle of the pump is pressed. Latches will automatically reset once the lift ascends approximately 17" from the base.

OPERATION

RAISE-LIFT

1. Press button on power unit

The latch mechanism will 'trip over' when the lift raises and drop into each latch stop. But, to lock the lift you must press the lowering handle to relieve the hydraulic pressure and let the latch set tight in a lock position.

Always lock the lift before going under the vehicle. Never allow anyone to go under the lift when raising or lowering. Read the safety procedures in the manual.

LOWER LIFT

1. Raise the lift until the latch clears.
2. Pull the latch release handle while pressing the lowering handle on the power unit.
Note: It is normal for an empty lift to lower slowly-it may be necessary to add weight.

SAFETY PROCEDURES

- Never allow unauthorized persons to operate lift. Thoroughly train new employees in the operation and care of lift.
- Caution: the power unit operates at high pressure.
- Remove passengers before raising vehicle.
- Prohibit unauthorized persons from being in shop area while lift is in use.
- Total lift capacity is 12000-lbs.
- Prior to lifting vehicle, walk around the lift and check for any objects that might interfere with the operation of lift and safety latches; tools, air hoses, shop equipment.
- When approaching the lift with a vehicle, center the vehicle wheel on the runway. Slowly drive the vehicle up on the runways. Have some one outside the vehicle guide the driver.
- Never use lift to raise one end or one side of vehicle.
- Prior to lowering vehicle, walk around the lift and check for any objects that might interfere with the operation of lift and safety latches; tools, air hoses, shop equipment. Slowly drive the vehicle out. Have some one outside the vehicle guide the driver.

ALWAYS LOCK THE LIFT BEFORE GOING UNDER THE VEHICLE. NEVER ALLOW ANYONE TO GO UNDER THE LIFT WHEN RAISING OR LOWERING.

MAINTENANCE SCHEDULE

The following periodic maintenance is the suggested minimum requirements and minimum intervals; accumulated hours or monthly period, which ever comes sooner. If you hear a noise or see any indication of impending failure - **cease operation immediately** – inspect, correct and / or replace parts

as required.

WARNING: OSHA REQUIRES USERS TO INSPECT LIFTING EQUIPMENT AT THE START OF EVERY SHIFT. THESE AND OTHER PERIODIC INSPECTIONS ARE THE RESPONSIBILITY OF THE USER.

DAILY PRE-OPERATION CHECK (8 HOURS)

The user should perform a daily check. ATTENTION! LOOK OUT! Daily check of safety latch system is very important . It could save you from expensive property damage, lost production time, serious personal injury and even death.

- Check safety lock audibly and visually while in operation
- Check safety latches for free movement and *full engagement with rack.*
- Check hydraulic connections, and hoses for leakage.
- Check cables connections- bends, cracks-and looseness
- Check for frayed cables in both raised and lowered position.
- Check snap rings at all rollers and sheaves.
- Check bolts, nut, and screws and tighten.
- Check wiring & switches for damage.
- Keep bass plate free of dirt, grease or any other corrosive substances.
- Check floor for stress cracks near anchor bolts.

WEEKLY MAINTENANCE (40 HOURS)

- Check anchor bolts torque to 150 ft-lbs for the 3/4 anchor bolts. *Do not use impact wrench.*
- Check floor for stress cracks near anchor bolts
- Check hydraulic oil level.
- Check and tighten bolts, nuts and screws.
- Check cylinder pulley assembly for free movement or excessive ware on cylinder yoke or pulley pin.
- Check cable pulley for free movement and excessive ware.

YEARLY MAINTENANCE

- Lubricate cable
- Grease rub blocks and column surface contacting rub blocks

The following items should only be performed by a trained maintenance expert.

- Replace hydraulic hoses
- Replace cables and rollers.
- Replace cables and sheaves.
- Replace or rebuild air and hydraulic cylinders as required.
- Replace or rebuild pumps / motors as required.
- Check hydraulic and air cylinder rod and rod end (threads) for deformation or damage.
- Check cylinder mount for looseness and damage.

Relocating or changing components may cause problems. Each component in the system must be compatible; an undersized or restricted line will cause a drop in pressure. All valve, pump, and hose connections should be sealed and/ or capped until just prior to use air hoses can be used to clean fittings and other components. However, the air supply must be filtered and dry to prevent contamination. most important- cleanliness- contamination is the most frequent cause of malfunction of hydraulic equipment.

TROUBLE SHOOTING

1. Motor dose not run:

A. Breaker or fuse blown
B. Motor thermal overload tripped. Wait for overload to cool.
C. Faulty wiring connections call electrician.
D. Defective up button call electrician

2. Motor runs but will not raise:

A. A piece of trash is under lowering valve. Push handle down and push the start button at the same time. Hold for 10-15 seconds. This should flush the system.
B. Check the clearance between the plunger valve of the lowering handle. There should be 1/16" .
C. Remove the check valve cover and clean ball and seat.
D. Oil level to low oil level should be just under the vent cap port when the lift is down!!!

3. Oil blows out breather of power unit:

A. Oil reservoir overfilled.
B. Lift lowered too quickly while under a heavy load.

4. Motor hums and will not run:

A. Impeller fan cover is dented. Take off and straighten.
B. Faulty wiring------call electrician
C. Bad capacitor------call electrician
D. Low voltage------call electrician
E. Lift overloaded---

5. Lift jerk going up and down: air in hydraulic system. Raise lift all the way to top and return to floor. Repeat 4-6 times with 2 min rest every time. Do not let this overheat power unit.

6. Oil leaks

A. Power unit: if the power unit leaks hydraulic oil around the tank-mounting flange; check the oil level in the tank. The level should be two inches below the flange of the tank. Check with a screwdriver.

B. Rod end of cylinder: the rod seal of the cylinder id out. Rebuild or replace the cylinder.

C. Breather end of the cylinder: the piston seal of the cylinder is out. Rebuild or replace the cylinder.

7. Lift makes excessive noise.

A. Cylinder pulley assembly or cable pulley assembly is not moving freely.

B. May have excessive wear on pins or cylinder yoke.

OWNER / EMPLOYER RESPONSIBILITIES

The owner/Employer:

Shall establish procedures to periodically maintain, inspect and care for the lift in accordance with the manufactures recommended procedures to ensure its' continued safe operations.

Shall provide necessary lockout / tagouts of energy sources per ANSIZ244.1 –1982 before beginning any lift repairs.

Shall not modify the lift in any manner without prior written consent of the manufacture.

Shall insure that lift operators are instructed in the proper and safe use and operation of the lift using the manufacturer's instructions supplied with the lift.

Packing List

No	Description	Qty	Note
1	Power-side runway	1	with cylinder ,hose and cables
2	Off-side runway	1	
3	Front cross bar	1	With lock release handle
4	Rear cross bar	1	
5	Power-side column	1	With mounting holes for pump
6	Off-side column	3	
7	Column cover	4	
8	Front stop	2	
9	Approaching ramp	2	
10	Long lock linkage rod	1	
11	Beam cover	4	
12	Accessory box	1	Anchors and shims
13	Electro-hydraulic pump	1	
14			
15			
16			
17			
18			
19			
20			
21			
22			

INSTALLATION INSTRUCTION Fig 2

For FP12K

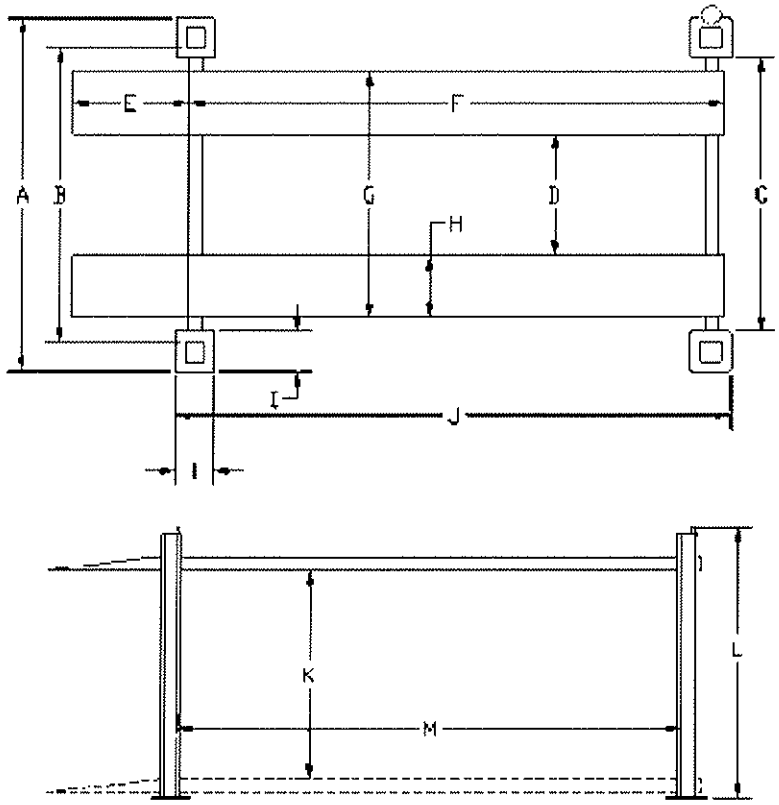

ITEM		MODEL 165972
Overall Width	A	3120mm
Inside Columns	B	2660mm
Inside Soleplate of columns	C	2560mm
Between Runways	D	928mm
Length of Ramp	E	910mm
Length of Runway	F	4860mm
Width of Outside runway	G	1980mm
Width of runway	H	482mm
Size of Soleplate	I	280*280mm
Overall Length	J	4960mm
Lifting Height	K	1760mm
Overall Height	L	2225mm
Length between Columns	M	4500mm
Lifting Capacity		12000lbs
Net Gross Weight		1000 1050 kg

INSTALLATION INSTRUCTION Fig 3

(These data are suggestion not min. requirement)

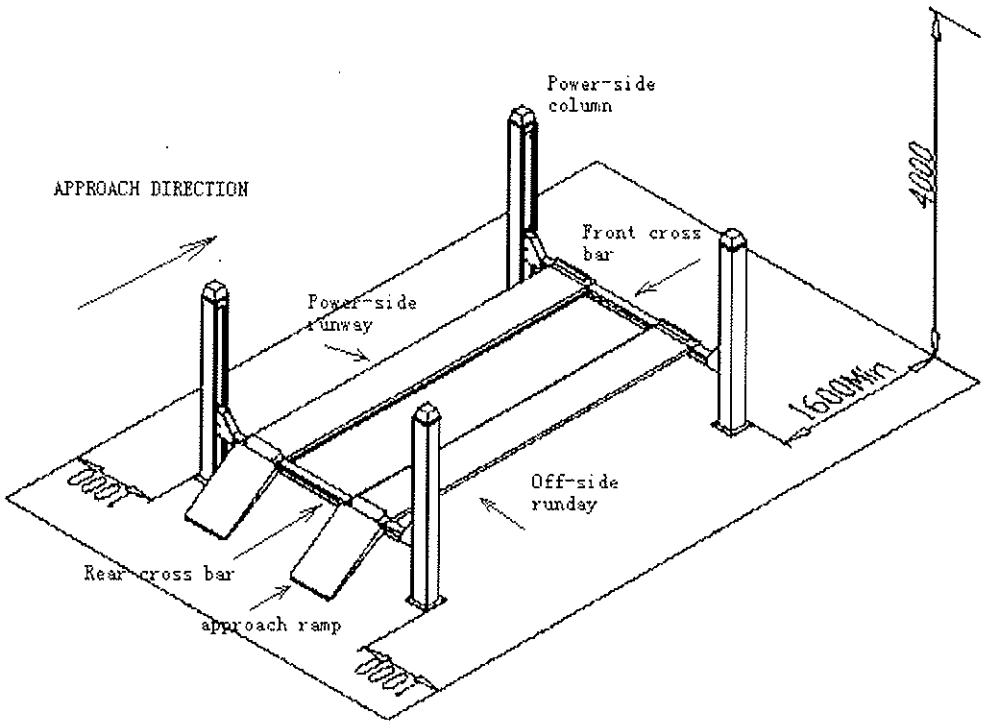

INSTALLATION INSTRUCTION Fig 20

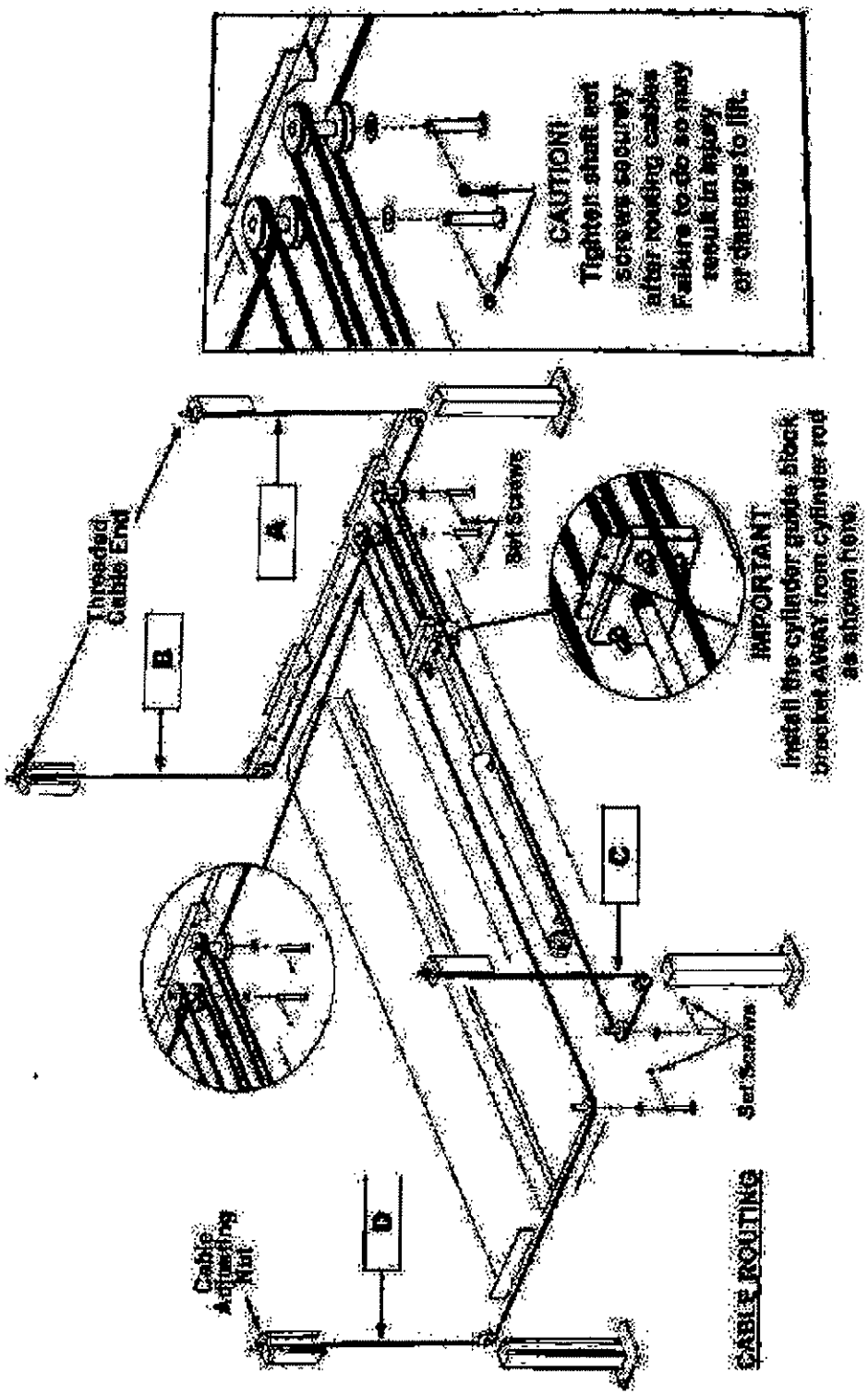

INSTALLATION INSTRUCTION Fig 21

FP12K-K

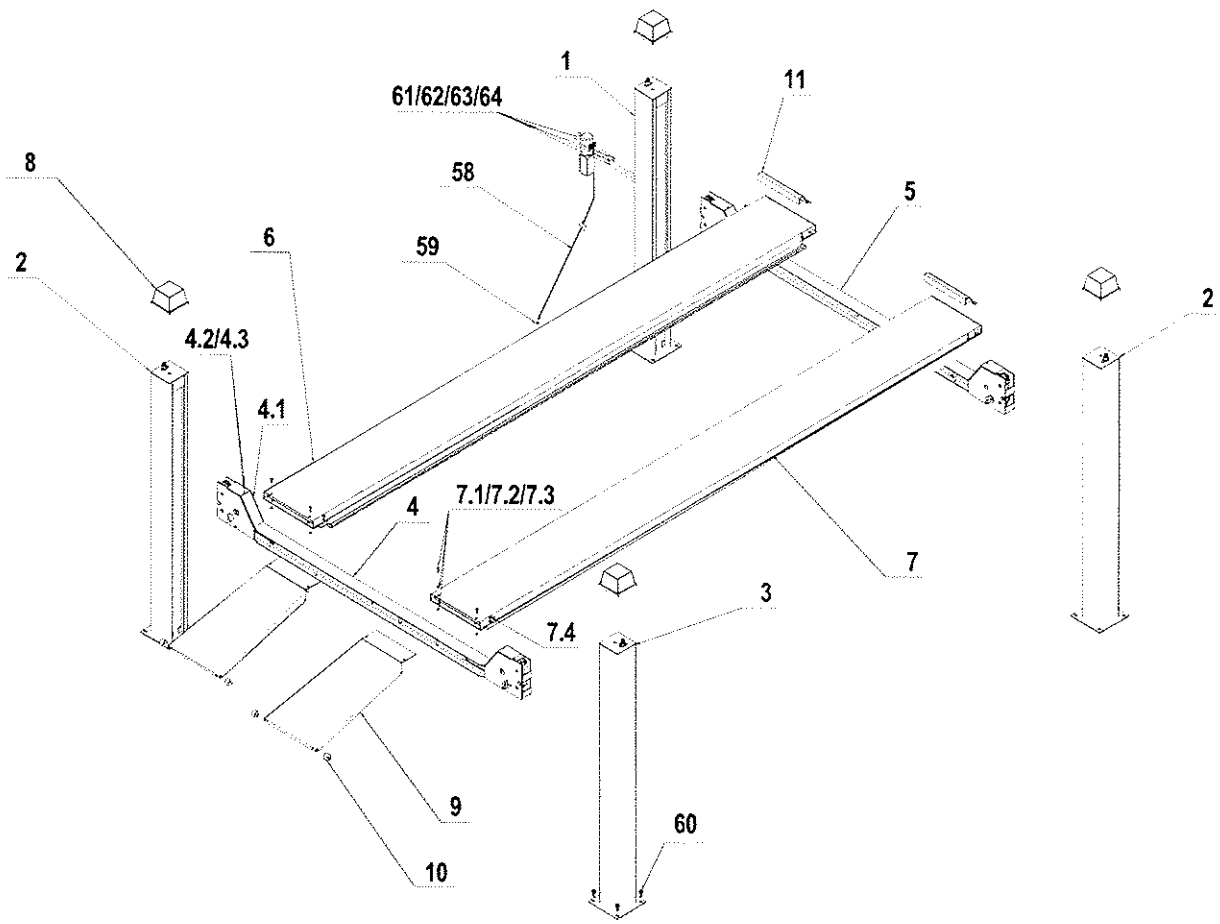

Spare Parts List

ITEM	DESCRIPTION	QTY
1	Main column parts 1	1
2	Column parts 2	2
3	Column parts 3	1
4	Cross beam parts 1	1
4.1	Hiding board	4
4.2	Z Cross bolt	4
4.3	Flat washer C	4
5	Cross beam parts 2	1
6	Runaway 1	1
7	Runaway 2	1
7.1	Hexangular bolt C	9
7.2	Hexangular nut C	9
7.3	Flat washer C	9
7.4	Hexangular bolt C	3
8	Column cover	4
9	Front board	2
10	Small wheel	4
11	Front wheel block	2
58	Hydraulic rubber hose	1
59	Hydraulic hose fitting	2
60	Anchor bolt	16
61	Hexangular bolt C	4
62	Flat washer	4
63	Spring washer	4
64	Power unit	1

* Easily Worn Parts

FP12K-K

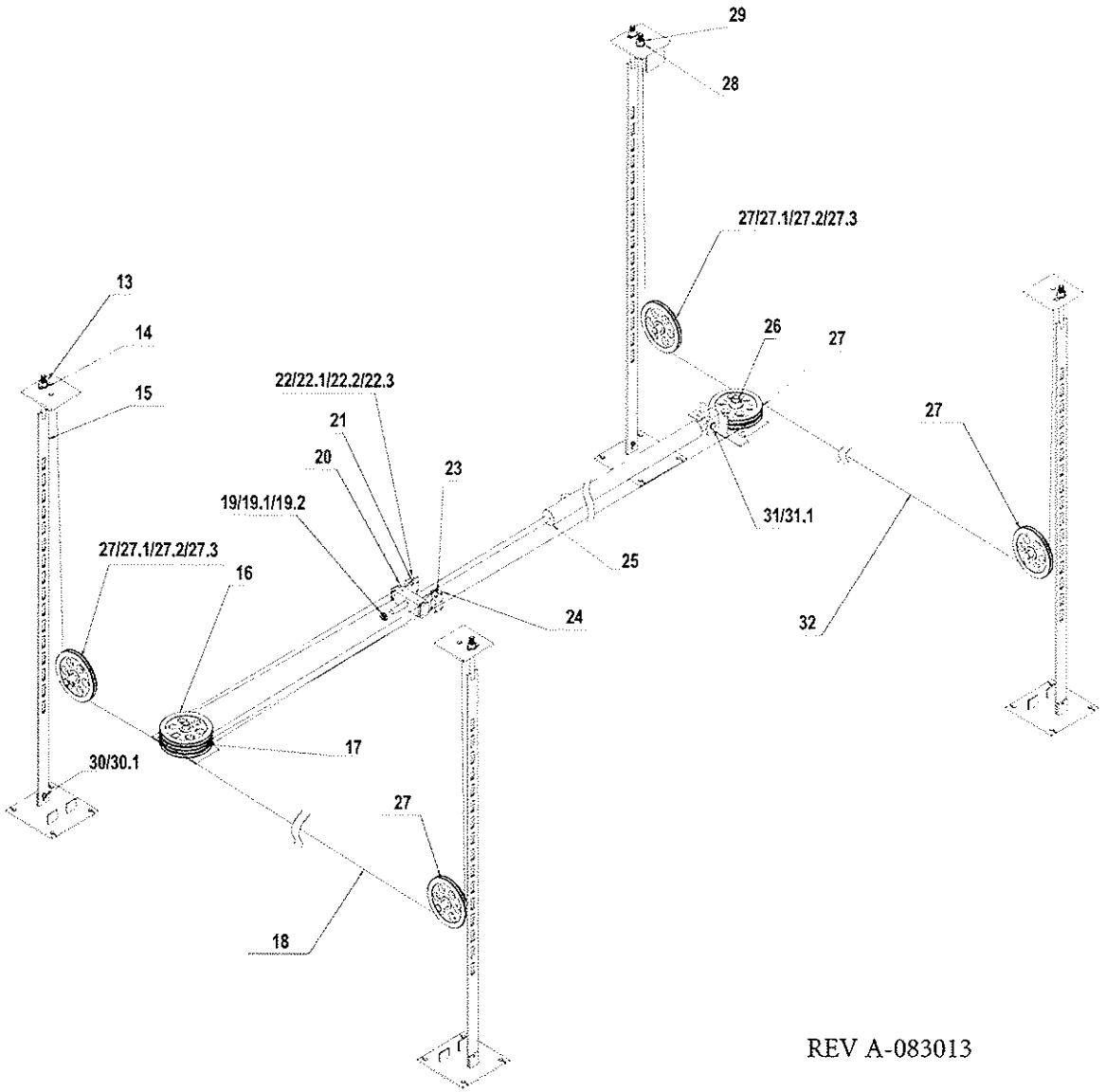

REV A-083013

Spare Parts List

ITEM	DESCRIPTION	QTY
13	Hexangular nut	8
14	Flat washer C	4
15	Safty card	4
16	Beam wheel 3	2
17	Beam wheel 2	1
18	Steel cable	1
19	Hexangular nut	1
19.1	Flat washer C	1
19.2	Snap ring	1
20	Cable stable	1
21	Cable block 2	1
22	Cable block 1	1
22.1	Inner hexangular screw	10
22.2	Flat washer C	10
22.3	Spring washer	10
23	Cable block 3	1
24	Cable block 4	1
25	Hydraulic cylinder	1
26	Set of beam wheel spindle	1
27	Beam wheel 1	6
27.1	Beam wheel spindle 1	1
27.2	Bush	6
27.3	Revolving oil cup A	2
28	Hexangular nut	8
29	Flat washer C	4
30	Inner hexangular screw	4
30.1	Flat washer C	4
31	Hydraulic cylinder spindle	1
31.1	Spindle spring washer A	1
32	Steel cable	1

* Easily Worn Parts

FP12K-K

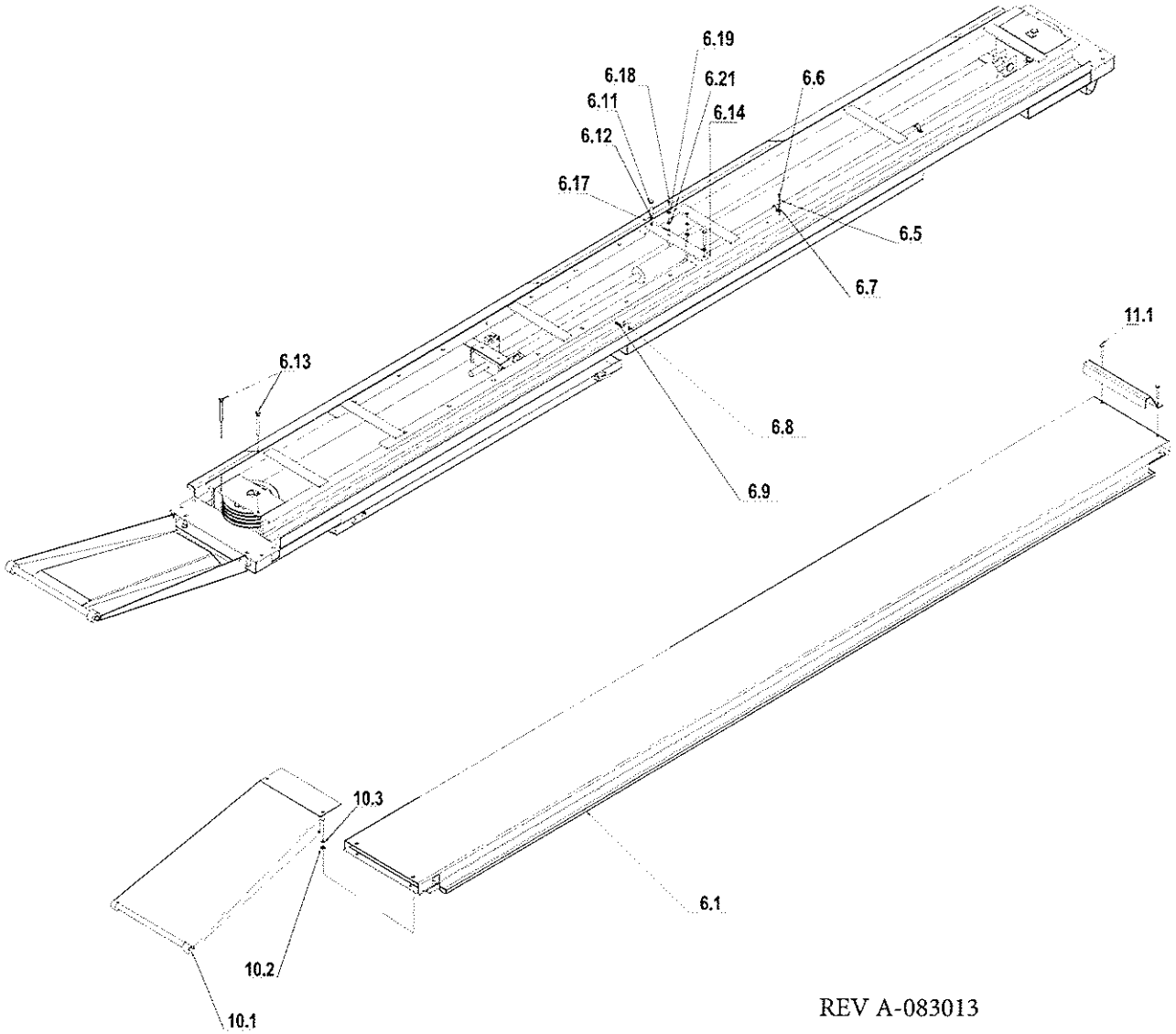

REV A-083013

Spare Parts List

ITEM	DESCRIPTION	QTY
6.1	Runaway 1 jointing parts	1
6.5	Big washer A & C	3
6.6	Z Cross bolt	3
6.7	Pose pump board	3
6.8	Safty transmission pole clasp	1
6.9	Hexangular nut	2
6.11	Hexangular bolt C	2
6.12	Flat washer C	4
6.13	Orientation bolt	4
6.14	Profiled bar connection	1
6.17	U Bolt	1
6.18	Hexangular nut	2
6.19	Spring washer	2
6.21	Flat washer C	2
10.1	Spring washer A	4
10.2	Hexangular nut	4
10.3	Flat washer	4
11.1	Hexangular bolt C	4

* Easily Worn Parts

FP12K-K

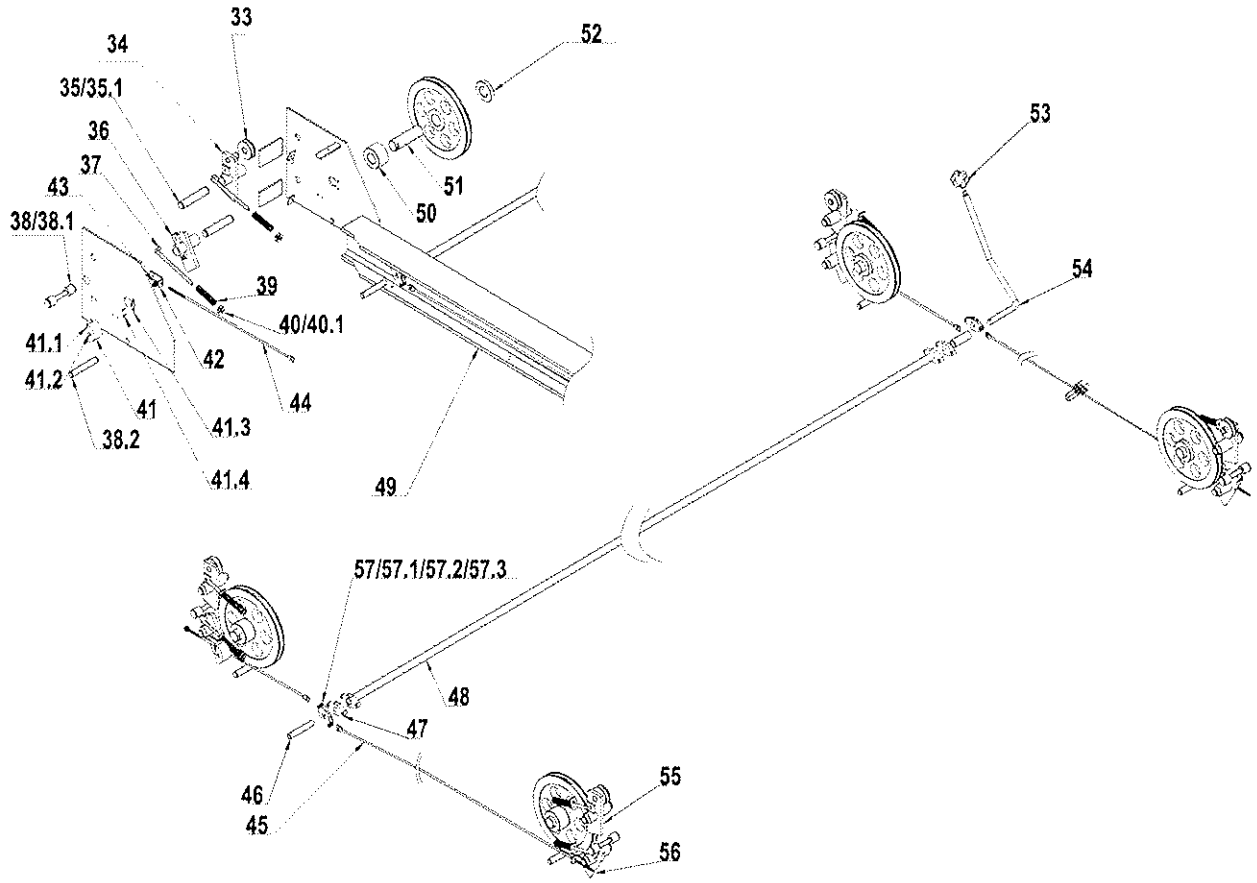

Spare Parts List

ITEM	DESCRIPTION	QTY
33	Safty idler wheel	4
34	Safety bolck1	2
35	Spindle 1	8
35.1	Spring washer A	16
36	Handle safty 1	2
37	Spindle pull handle	8
38	Spindle 2	4
38.1	Spring washer A	8
39	Spring	8
40	Hexangular nut	16
40.1	Flat washer	8
41	Rubber block	8
41.1	Cross bolt	8
41.2	Cross bolt	8
41.3	Orientation board	4
41.4	Z Cross screw	8
42	Pull block	4
43	Hexangular nut	8

ITEM	DESCRIPTION	QTY
44	Safty screw pole1	2
45	Safty screw pole 2	2
46	Safty handle spindle	1
47	Connection	2
48	Safty transmission pole	1
49	Beam 1 jointing	1
50	Spindle bush 2	4
51	Wheel spindle	4
52	Spindle bush 1	4
53	Safty handle	1
54	Safty handle	1
55	Safty block 2	2
56	Handle safty 2	2
57	Safty handle pole--Connet 1	2
57.1	Inner hexangular screw	4
57.2	Spring washer	8
57.3	Pin	4

* Easily Worn Parts

IMPORTANT

POWER UNIT PRIMING PROCEDURE

THE PROBLEM: Power unit runs fine but will not pump any fluid.

Step 1 – Locate the check valve, the flush plug to the left of the lowering valve. (See drawing below.)

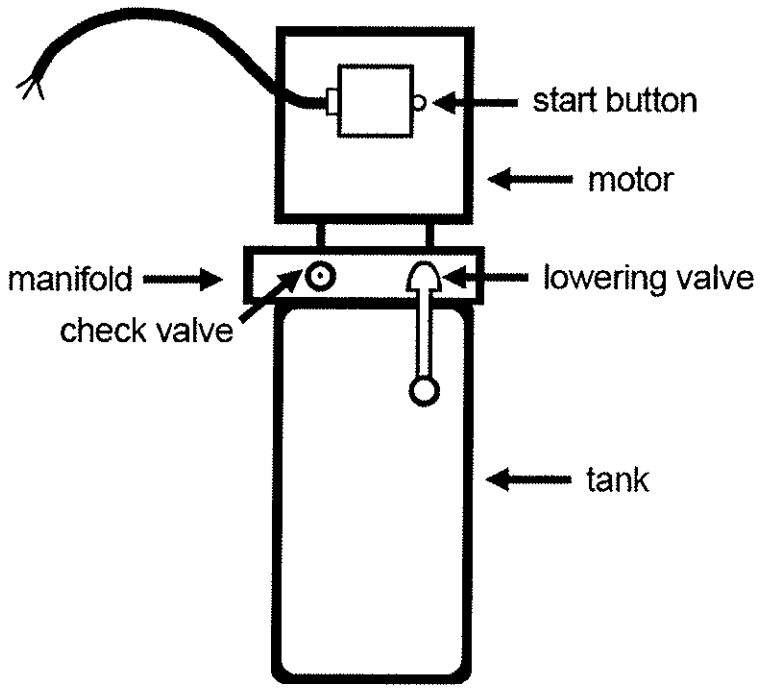

Step 2 – Using an Allen wrench and shop towel – with shop towel in place to catch fluid – loosen the check valve plug 2 ½ turns to allow it to leak.

Step 3 – Push the START button for one second, then release for three seconds. Repeat these steps until unit starts pumping fluid.

Step 4 – Tighten the check valve plug.

YOUR POWER UNIT SHOULD BE PRIMED